OYSTER PERPETUAL

DATEJUST

ROLEX

WEARING THE WATCH FOR THE FIRST TIME

Before being worn for the first time, or if it has stopped, a Rolex watch must be wound manually in order to function correctly and precisely.
To wind the watch manually, unscrew the winding crown completely, then turn it several times clockwise. (Turning in the other direction has no effect.) A minimum of 25 turns is required for adequate partial winding. The watch will then be wound automatically as long as it is worn on the wrist. Carefully screw the crown back down against the case to ensure waterproofness.

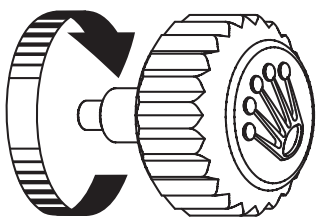

The green seal accompanying your Rolex watch is a symbol of its status as a Superlative Chronometer. This exclusive designation attests that it has successfully undergone a series of specific final controls by Rolex in its own laboratories in addition to the official COSC certification of its movement. This unique testing of its chronometric precision, waterproofness, self-winding and reliability pushes back the boundaries of performance and makes Rolex a benchmark for excellence in mechanical watches. For further information, please visit **rolex.com**.

THE HEART OF THE DATEJUST MODELS

OYSTER PERPETUAL DATEJUST 4-5

USING YOUR WATCH

OVERVIEW 6-7
SETTING THE WATCH 8-11
EASYLINK COMFORT EXTENSION LINK 12-13

ROLEX SERVICE

CARING FOR YOUR ROLEX 14-15
AFTER-SALES SERVICE 16-17
WORLDWIDE SERVICE NETWORK 18

ROLEX.COM

19

ROLEX

OYSTER PERPETUAL DATEJUST

OYSTER PERPETUAL DATEJUST

The Oyster Perpetual Datejust is the watch of reference for those who believe that elegance is timeless.

With the Datejust, Rolex introduced a calendar with the date displayed via a disc in a window at 3 o'clock, an innovation that became an industry standard. The famous Cyclops lens on the virtually scratchproof sapphire crystal makes the date easy to read.

The Oyster case, guaranteed waterproof to a depth of 100 metres (330 feet), is a paragon of robustness and elegance. It efficiently protects the self-winding mechanical movement, entirely manufactured by Rolex.

The Oyster Perpetual Datejust is available in a range of sizes, with a wide choice of dials, bezels and bracelets.

OVERVIEW

1. Hour hand
2. Minute hand
3. Seconds hand
4. Date window
5. Twinlock winding crown with double waterproofness system

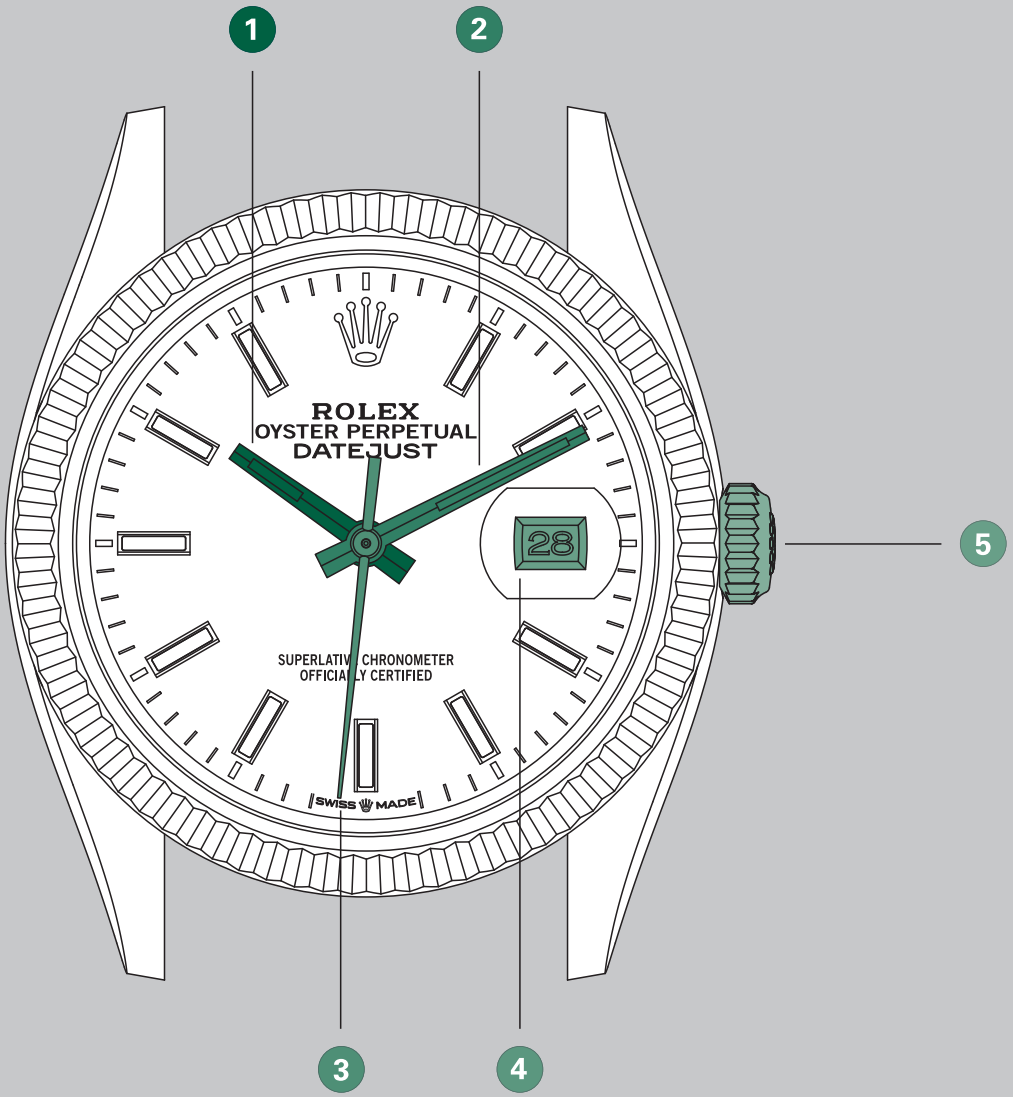
1
2
ROLEX
OYSTER PERPETUAL
DATEJUST
28
SUPERLATIVE CHRONOMETER
OFFICIALLY CERTIFIED
SWISS MADE
5
3
4

SETTING THE WATCH

Screwed-down position *(position 0)*
The crown is completely screwed down against the case. When the crown is in this position, the Oyster Perpetual Datejust is guaranteed waterproof to a depth of 100 metres (330 feet).

Manual winding *(position 1)*
The crown is unscrewed. To wind the watch manually, turn the crown clockwise; turning in the other direction has no effect. When setting the watch for the first time or after the watch has stopped, complete a minimum of 25 turns for partial winding.

Initial winding and setting

A. Wind the watch manually
(position 1 – see page 8).

B. Note the date change at midnight, then set the time
(position 3 – see pages 10-11).

C. Set the date
(position 2 – see pages 10-11).

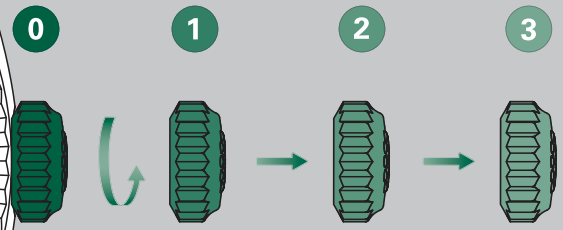

Unscrew and then pull out

After every use, carefully screw the crown back down against the case to guarantee the waterproofness. Return the crown to *position 1* and apply light pressure on it while screwing it down clockwise against the case. The crown should never be unscrewed underwater.

Setting the date *(position 2)*

The crown is unscrewed and pulled out to the first notch.

To set the date, turn the winding crown clockwise or counterclockwise depending on the model. Turning in the other direction has no effect or will manually wind the watch.

During this operation, the watch continues to function.

Setting the time *(position 3)*

The crown is unscrewed and pulled out to the second notch. The seconds hand is stopped, allowing you to set the time to the precise second. To set the hour and minute, turn the crown in either direction. To avoid confusion between a.m. and p.m. hours, move the hour hand to 12 o'clock. If the date changes, it is midnight.

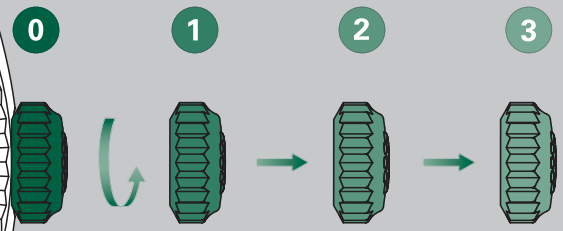

Unscrew and then pull out

After every use, carefully screw the crown back down against the case to guarantee the waterproofness. Return the crown to *position 1* and apply light pressure on it while screwing it down clockwise against the case. The crown should never be unscrewed underwater.

EASYLINK COMFORT EXTENSION LINK

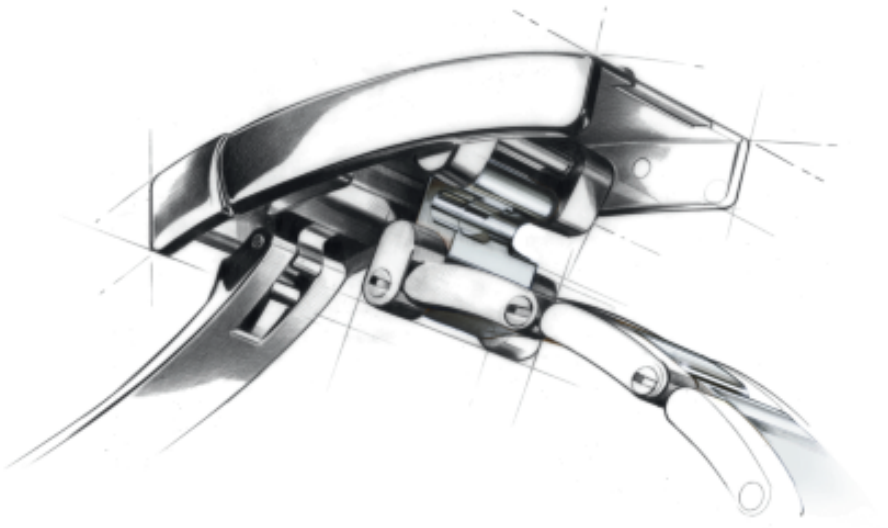

To ensure optimal comfort when wearing your watch, Rolex created the Easylink comfort extension link, which is available on some versions. Its exclusive design comprises a link that is pulled out or folded back on itself to adjust the length of the bracelet by approximately 5 mm, without the need for tools.

Adjusting from the short position to the long position

1

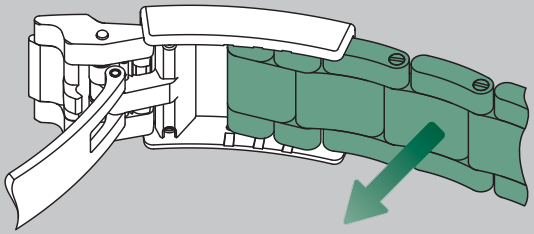

2

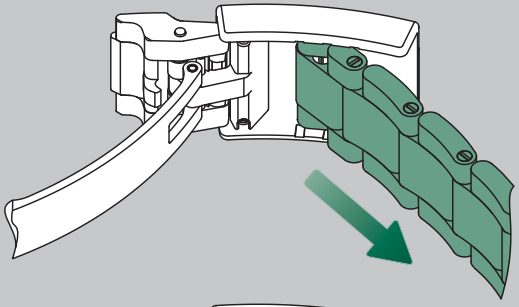

3

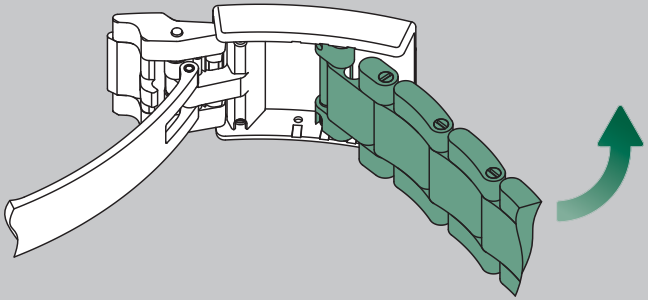

4

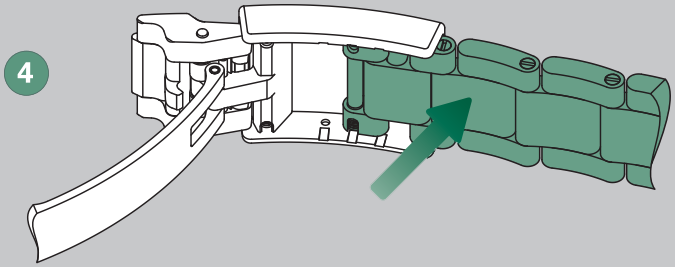

Adjusting from the long position to the short position

1

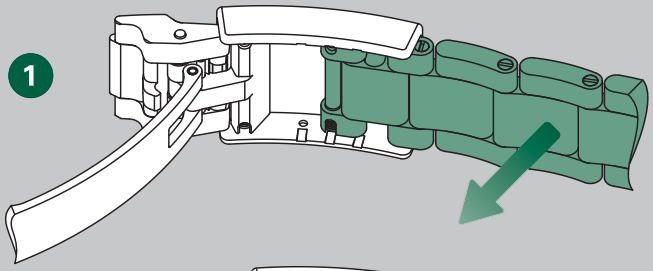

2

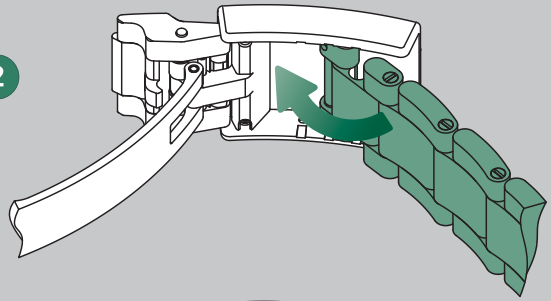

3

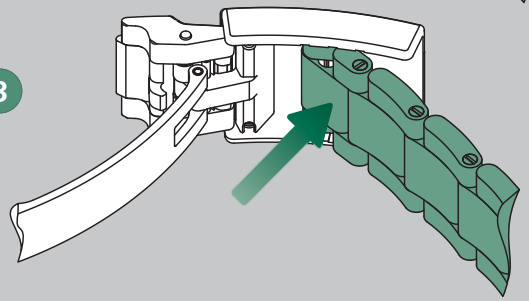

4

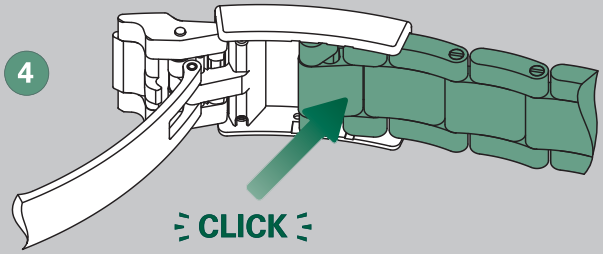

CARING FOR YOUR ROLEX

Thanks to Rolex expertise, your watch will require very little day-to-day care.

You can help preserve its lustre by cleaning it occasionally with a microfibre cloth. You can also wash the case and bracelet from time to time using soapy water and a soft brush. After wearing your watch in the sea, it is important to rinse it with fresh water to remove any salt and sand deposits.

Before cleaning your watch, always ensure that the crown is screwed down properly against the case to guarantee waterproofness.

AFTER-SALES SERVICE

Rolex watch servicing ensures that your timepiece will continue to perform optimally and meet Rolex's stringent requirements in terms of precision, reliability and waterproofness throughout its life.

The timekeeping accuracy of your watch is largely dependent on high-performance lubricants specially developed by Rolex to minimize friction and prevent wear of components. To guarantee continued accuracy and waterproofness, Rolex recommends that you periodically return your watch to an Official Rolex Retailer or Service Centre for professional servicing, which will always be carried out by a Rolex-approved watchmaker.

During a complete service, the watch is dismantled and all of its components – the case, bracelet and movement – are closely examined.

The movement is entirely disassembled and all the parts are carefully inspected. Those that no longer meet Rolex requirements are systematically replaced by new components. The movement is lubricated on reassembly. The case

and bracelet are re-polished or satin-finished according to their original finish, restoring their shine and lustre while removing any marks or scratches.

At the end of the process, your Rolex watch undergoes a series of tests to verify its functions, waterproofness and power reserve, as well as the precision of its movement.

After a complete Rolex service, your watch is covered by a service guarantee.

WORLDWIDE SERVICE NETWORK

The network of Official Rolex Retailers and Service Centres covers more than 100 countries around the world and draws on the expertise of highly skilled watchmakers, carefully selected and trained by Rolex.

Official Rolex Retailers can advise you on all the technical aspects of your watch's functions. Whether your bracelet needs sizing or it is time for a complete service, highly qualified Rolex watchmakers are on hand worldwide to meet all of your service needs.

For a list of Official Rolex Retailers and Service Centres, please visit **rolex.com**.

ROLEX.COM

We invite you to visit **rolex.com**,
a privileged place to learn more about
the functions of your Rolex watch
and about the quality, know-how and
fundamental values of the brand.

Welcome to the world of Rolex.

Rolex reserves the right to modify the models illustrated in this publication at any time.

© Rolex SA, 3-5-7, rue François-Dussaud, 1211 Geneva 26, Switzerland
IMR-DJ-EN-20 - 7.2020 - Printed in Switzerland

rolex.com

ROLEX